XMTG-818(T) intellgence digital temperature controller

(with timer)

Instruction Manual

Ⅰ、Survey:

XMTG-818(T) intelligence digital temperature controller ,equipped with single chip and double row 4 -digit LED display, has seven input signals of thermocouple and thermo- resistance for free selection in the field , ON/OFF control and PID control. It also has time function with selectable time unit of hour/minute or minute /second . With the parameters set by using function of setting itself(AT function),their control effect can be satisfied in the most of case. There are characters of no over-regulation and good anti-interference in this type controller. They are widely used in the temperature automatic control system of machinery, chemical, ceramics, light industry, metallurgy, petrochemical and heat treatment industry, etc.

Ⅱ 、Main technical specification

2.1、Input type: CU50、PT100、K、E、J、T、S
2.2、Basic error: ±0.5%F.S±1B
2.3、Cold end compensating error: ≤±2.0℃
2.4、Time range: 1M～59.59H or 1S～59.59M
2.5、Timing precision: class 0.005
2.6、Sampling cycle: 0.5S
2.7、The main relay contact output：AC220V/5A（resistance load）or AC220V/0.3A（inductive load）
2.8、Alarm relay and time relay contact output：AC220V/3A（resistance load）or AC220V/0.3A（inductive load）
2.9、Overall dimension（mm）：48×48×110 Hole size（mm）：44×44
2.10、Power： AC85V～242V or AC100V～250V, 50/60Hz
2.11、Working environment：temperature 0～50.0℃, relative humidity ≤ 85%RH, without corrode and strong electromagnetic interference.

Ⅲ、Panel and wiring diagram description (consult)

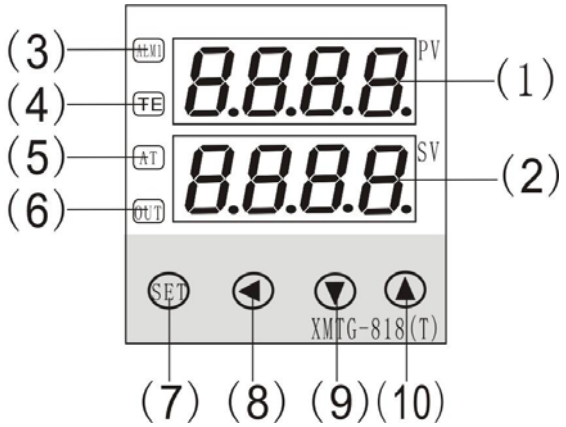

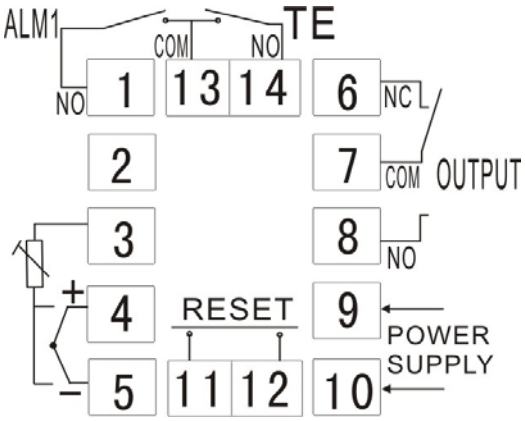

（1）PV display window: In the normal display state, it displays the measured value; in the parameters modification state, it displays parameters symbol.

（2）SV display window: In the normal display state, it displays the countdown time or the temperature set value; in the parameters modification state, it displays the parameter value.

（3）ALM1 indicator: When this indicator light on, the ALM1 relay have output（that is, terminal No.1 and 13 are connected）.

（4）TE indicator：When this indicator light on, the TE relay have output（that is, terminal No.14 and 13 are connected）.

（5）AT indicator：When the controller is in the setting itself state, the indicator light on.

（6）OUT indicator：When this indicator light on, the relay of control have output (that is,terminals No. 7 and 8 are connected).

（7）Function key (SET): Press the key and release it to modify the SP and TE parameters. Press the key for 3 seconds to enter the parameters modification state；

（8）Shift key: In the parameters modification state, press the key to realize the movement of number location ;

（9）Number reduced key: In the parameters modification, set value modification or manual adjustment state, press this key to decrease the number .

（10）Number increased key：In the parameters modification, set value modification or manual adjustment state, press this key to increase the number.

Ⅳ、Internal parameters

Series	Code	Name	Setting range	explaining	Ex-Factory
0	SP	Temperature setting value	Determined by P-SL and P-SH	Please refer to **“6.2、The second setting area”**	50
1	tE	Timing setting	1S～59：59M 1M～59：59H	It can time only after terminals No.11 and 12("RESET") are short connected	10
2	AL1	Temperature alarm value	Upper limit alarm is determined by P-SL,P-SH; following alarm: 0.0～100.0	To set for the upper limit alarm, or the following alarm temperature value.	100
3	P	Proportion modulus	0～200.0	**When P=0,the controller is under ON/OFF control**	15.0
4	I	Integral time	0～3000		240
5	d	Differential time	0～200		30
6	At	Setting itself	**ON** or **OFF**	**ON**：open function of setting itself; **OFF**：close function of setting itself Please refer to“**Ⅶ、Setting itself”**	OFF
7	t	Control period	2～120S	Set the relay control cycle, ON/OFF control is meaningless.	10
8	HY	Main control return difference	0.1～100.0	Only have meaning when main control output is ON/OFF (P=0)	1.0
9	HY1	Temperature alarm return difference	0.1～100.0	Use for alarm contact output return difference setting	1.0
10	Pb	Sensor error amendment	±20.0	When the sensor have error, it is used for correction.	0
11	FILt	Filt modulus	0～50	It is the software filter constant of measurement sampling.The constant ↑,the measurement antijamming capability ↑, but the measurement and system time ↓	20
12	LocK	Code lock	0～50	LocK＝0,all the parameters can be revised; LocK＝1,only the **SP** and **TE** can be revised; LocK＞1,all the parameters can not be revised	0

13	Sn	Input type	CU50（CuS0）、PT100(Pt)、K（K）、E（E）、J（J）、T（t）、S（S）、	Input type	Max. temperature range	K
				CU50	-50.0～150.0℃/-58.0～302.0℉	
				PT100	-199.9～600.0℃/-199.9～1112℉	
				K	-30.0～1300℃/-22.0～2372℉	
				E	-30.0～700.0℃/-22.0～1292℉	
				J	-30.0～900.0℃/-22.0～1652℉	
				T	-199.9～400.0℃/-199.9～752.0℉	
				S	-30.0～1600℃/-22～2912℉	
14	P_SH	The max. value of temperature range	——	They are used to reset proper temperature range as per user'application. As for the Max. temperature range for different inputs, please refer to **Sn, P-SH≥P-SL**		1300
15	P_SL	The min. value of temperature range	——			0
16	outH	The max. value of allowable output	OUTL～100.0	Can serve as low and high output limiter. Meaningless when manual and ON/OFF control(unit:%)		100.0
17	outL	The min. value of allowable output	0.0～OUTH			0.0
18	ALP	Alarm output definition	0～1	0: upper limit alarm 1: following alarm		0
19	tEP	Time unit choice	0～1	0: minute and second display 1: hour and minute display		0
20	Cool	System function choice	ON/ OFF	OFF: reverse control (heating control) ON: positive control (cooling control)		OFF
21	oP_A	Output type	SSR or RLP	SSR: solid state relay output RLP: relay output		RLP
22	oPP0	power output of switching on	0～100	Soft start function(that is, first output electric power coefficient.) (unit:%)		0
23	C F	Fahrenheit and degree centigrade selecting	℃ or ℉	C：℃；　　F：℉		C
24	dP	Display precision	ON or OFF	ON：have radix point; OFF：have not radix point		OFF

25	Int	Time function selection	0～3、	**0**：common temperature control(with one alarm)without timing function(It should be set to be ‘0” when you use “AT’ function). **1** ： Connect terminal 11 and 12(RESET), the meter start timing when it reaches the setting temperature . The TE relay will output after reaching setting time. The controller’output relay keep on same working situation(keep on heating) **2**：Connect terminal 11 and 12(RESET), the meter start timing when it reaches the setting temperature. The TE relay will output after reaching the setting time,Meanwhile, the controller’output relay operate to stop heating； **3** ： temperature control （ with one alarm）＋time relay ： In this case, temperature controller and time relay are working respectively. a).Temperature controller: It control temperature normally. b).Time relay: It works as follows: Connect terminal 11 and 12(RESET), Timer start timing(countdown) the terminal TE will be connected and give out an alarm(you may install buzzer in TE) after time is up. Disconnect terminal 11 ans 12 for reset. Connect terminal 11 and 12(RESET) again, it will do same as the above. **Note:** If the time function is changed, the new time function will be effected after switching on meter again.	0

Ⅴ、Flow chart

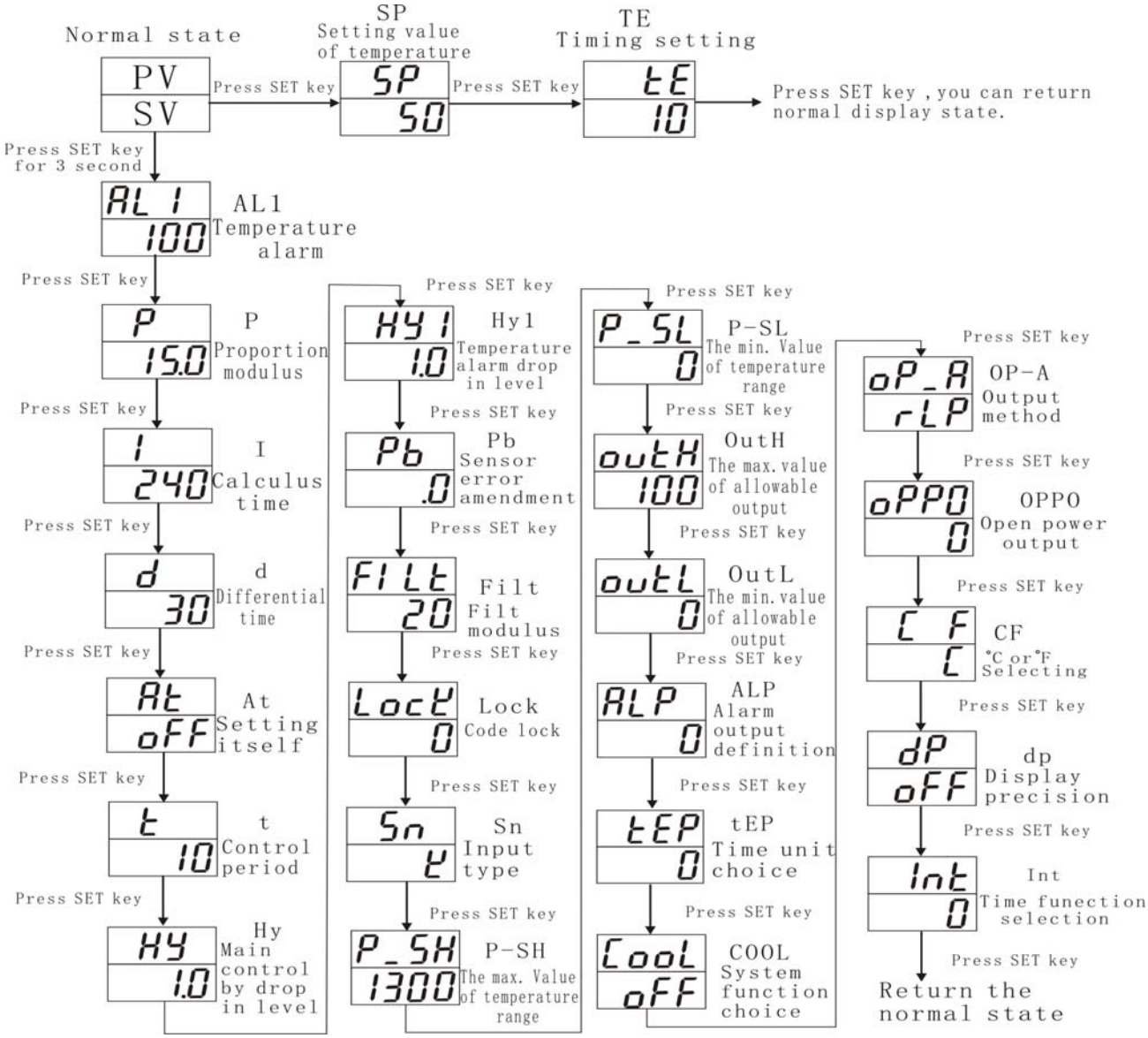

Ⅵ、Parameters setting method:

6.1、The first setting area（Parameters setting）

Power on controller first, then ,press the SET key 3 seconds to enter into the first setting area, the controller will display the parameter code 2～25 in the upper row window and display the parameter value in the low row, Press the ▲、▼ or ◀ key to adjust the parameter value, then press the SET key to save the data and enter into the next parameter for setting, Keep pressing the SET key to exit quickly or press SET +◀keys to exit directly. If no operation within 10 seconds during setting, it will save the data and withdraw from the setting state automatically.

6.2、The second setting area（temperature and time setting）

Power on controller first, then ,press the SET key and release it to enter into the second setting area, you can modify the settinng value "SP" according to the above method, and then press SET key to display the time setting parameter "tE", modification method ibid.

Ⅶ、Setting itself

When the meter is used at first or the control performance is worse after the condition changes, it is necessary to use this function of setting itself to set the parameters ,such as P 、I、D,etc.， so as to avoid the trivial job of manual operation which can not reach perfect effect in the past. The time of setting itself depends on working condition. Take temperature control (reverse/heating) for example, the method are as below： After setting the desired setting value of temperature, set **HY** to be 0.5～1.0℃, set **Int** to be 0 (it is status of temperature control without timer), set "AT" to be ON， AT lamp starts glittering, the meter enters into the status of setting itself, and the control method is ON/OFF in this time；After three times vibration, it will automatically save P、I、D parameter, AT lamp goes out, the process of setting itself is over.

Note：① If the power goes off during setting, it will restart setting after switching on the meter next time. It is because the meter has memory function,

② If the setting should be stopped and exited artificially during setting,, set "AT" to be OFF, then it can exit, but ,In this case, the setting result will be of no effect.

Ⅷ、Fault analysis and clearance

XMTG-818(T) controller with advanced production process, has the strict test before leaving factory, it improve the reliability of the controller. The usual fault is caused by the wrong operation or parameter setting. If you find the fault couldn't be cope with, please record it, and contact with the agent or us. Sheet 8-1 is the usual fault of **XMTG-818(T)** in the daily application：

Sheet 8-1 clearance for common fault

Fault symptom	Causes analysis	Clearance
Abnormal power	1、Poor contact of power cord 2、Power switch does not close well	Check the power
Signal display do not correlate with the facts.（display'HH'or'LL'）	1、Sensor model mismatch 2、Wrong signal connection	1、Check sensor model and controller'interior input parameter 2、Check signal wire
Abnormal output control	1、Wrong connecting output wire 2、"Reset" terminals are not connected	1、Check output connection 2、Check Reset terminals

★Note: Our company will continue to improve product technology, design specification. If change, please subject to the material object, without notice.